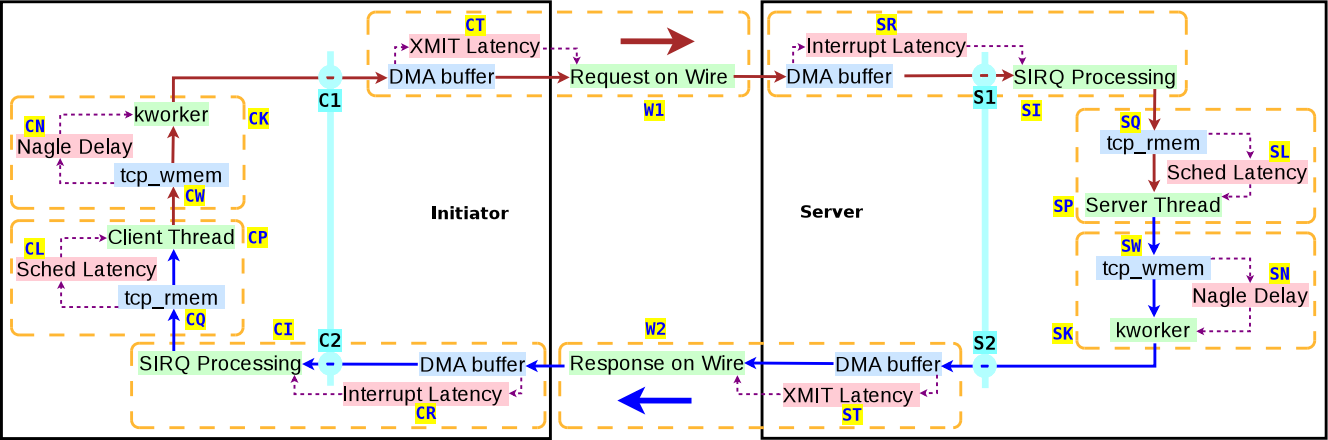
CT
XMIT Latency
DMA buffer
Request on Wire
W1
SR
Interrupt Latency
DMA buffer
SIRQ Processing
S1
SI
C1
CN
Nagle Delay
kworker
CK
tcp_wmem
CW
CL
Sched Latency
Client Thread
CP
tcp_rmem
CQ
Initiator
Server
SQ
tcp_rmem
SL
Sched Latency
SP
Server Thread
SW
tcp_wmem
SN
Nagle Delay
SK
kworker
CI
C2
SIRQ Processing
DMA buffer
Interrupt Latency
CR
W2
Response on Wire
S2
DMA buffer
XMIT Latency
ST